AK PART/PRINT #:	Customers PART/PRINT #:	PART DESCRIPTION:	Page #:	Date Drawn:	Drawn By:	Revised by:	Date Revised:	Revision Level:
AKP20250	---	36 X 12" EXTENSION	1 of 1	12/19/07	M.O.	A.D.	7/19/12	003

THIS DRAWING IS THE SOLE PROPERTY OF AK INDUSTRIES INC.

TOP VIEW

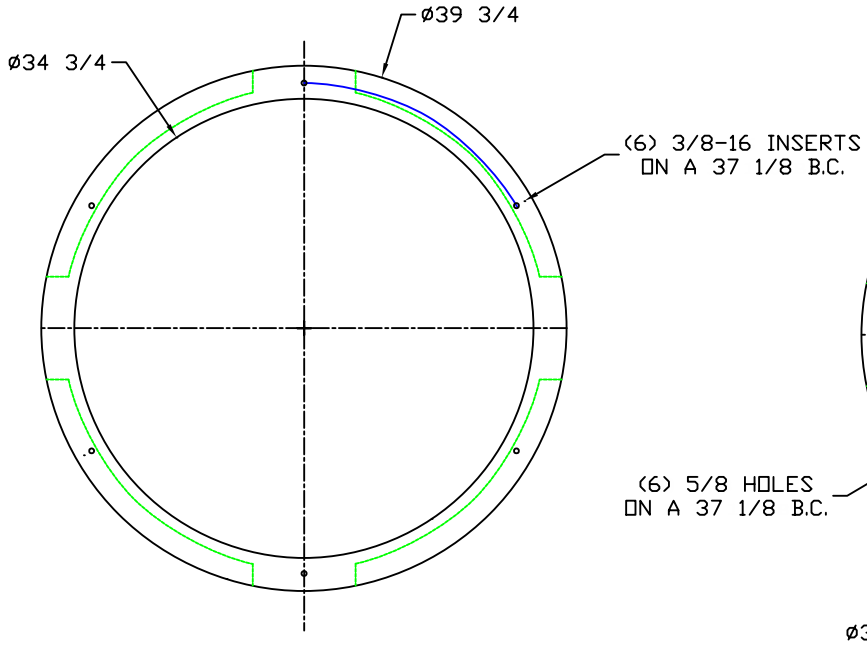

BOTTOM VIEW

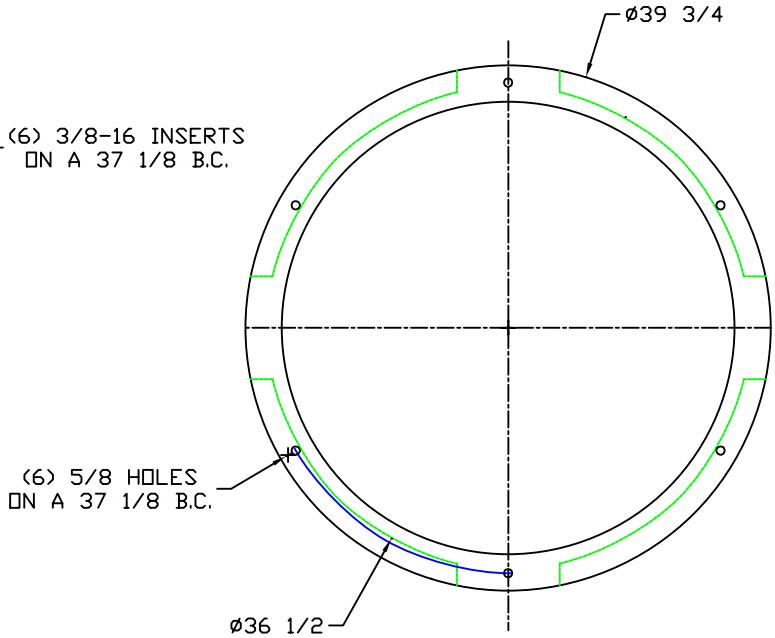

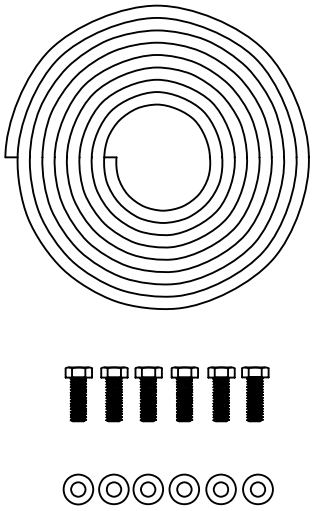

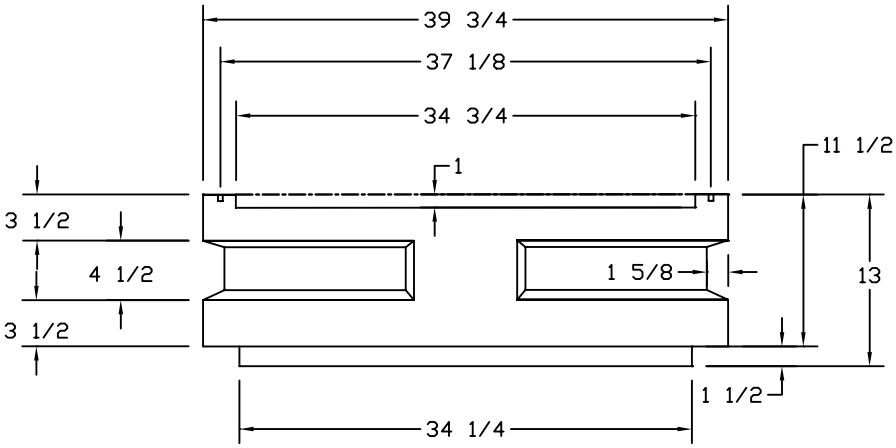

BILL OF MATERIALS

PART#	DESCRIPTION:	QTY:	Drawing Ref #:
AKR50075	3/8-16 ALUMINUM INSERTS	6	
AKP20255	GASKET PACK	1	

PART SPECIFICATIONS:

MATERIAL / TYPE	COLOR:	WEIGHT:
Polyethylene	BLACK	35 LBS.

REVISIONS / SPECIAL NOTES:

ITEM #	DESCRIPTION
003	ADDED NEW TITLE BLOCK &
003	AKP20255 GASKET PACK