PART/PRINT #:	PART DESCRIPTION:	SCALE:	REVISION:	DATE:
AKP35000	POLYPROPLENE BASIN 18X22	NOT TO SCALE	002	8/29/03

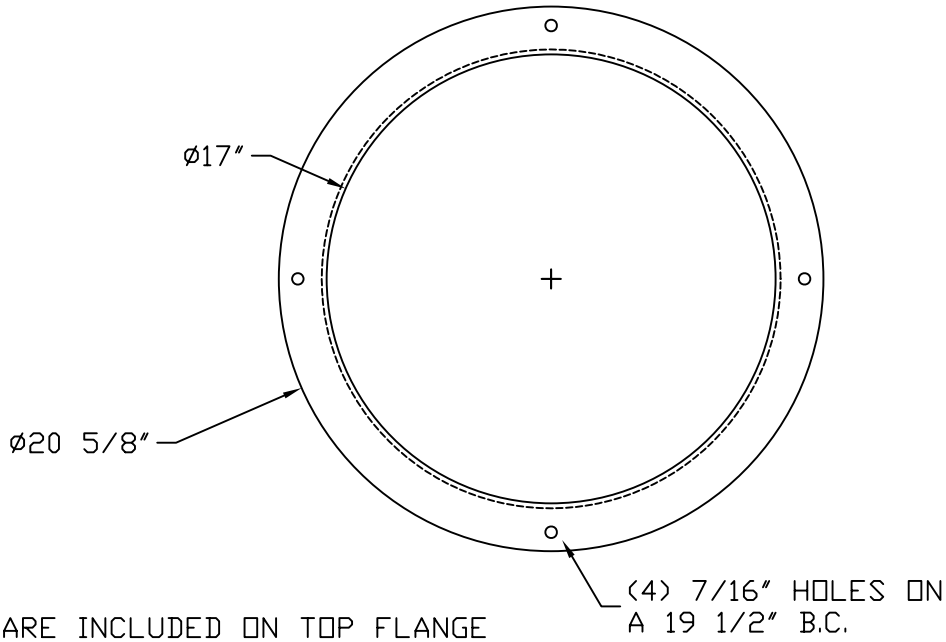

NOTES:
4 ZERTS ARE INCLUDED ON TOP FLANGE

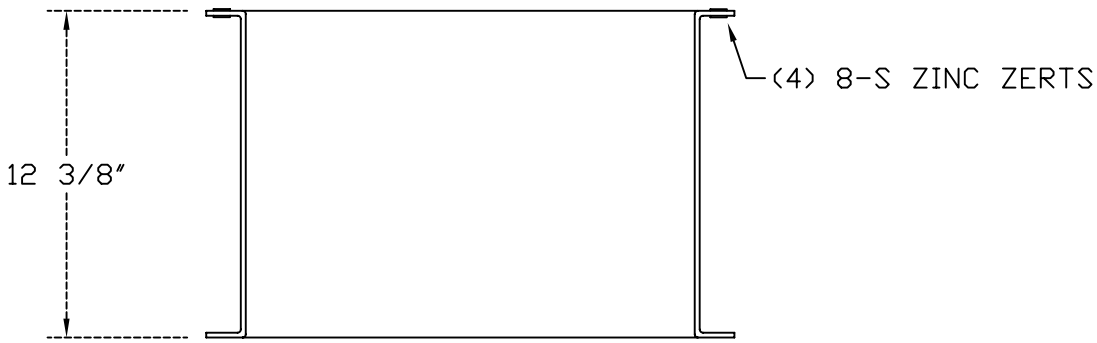

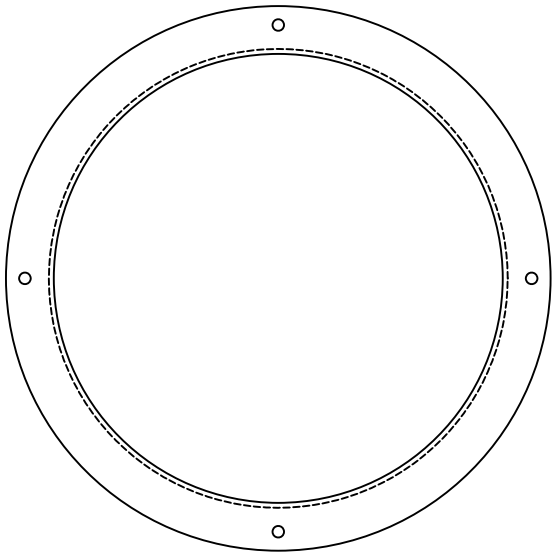

B.O.M.
AKP10506 GASKET PACK/EXTENSION/4 BOLT
AKR50900 8-S ZINC ZERTS

THIS DRAWING IS THE SOLE PROPERTY OF AK INDUSTRIES INC.

AK INDUSTRIES INC.
2055 PIDCO DR.
PLYMOUTH, IN. 46563
PHONE:(574) 936-6022

DRAWN BY:	TOLERANCE:	SIGNATURE:
M.OLIVAREZ	± 0.250 UNLESS SPECIFIED OTHERWISE	