PART/PRINT #:	PART DESCRIPTION:	SCALE:	REVISION:	DATE:
AKP10010	ADAPTAFLEX 0.50"	NOT TO SCALE	002	12/27/02

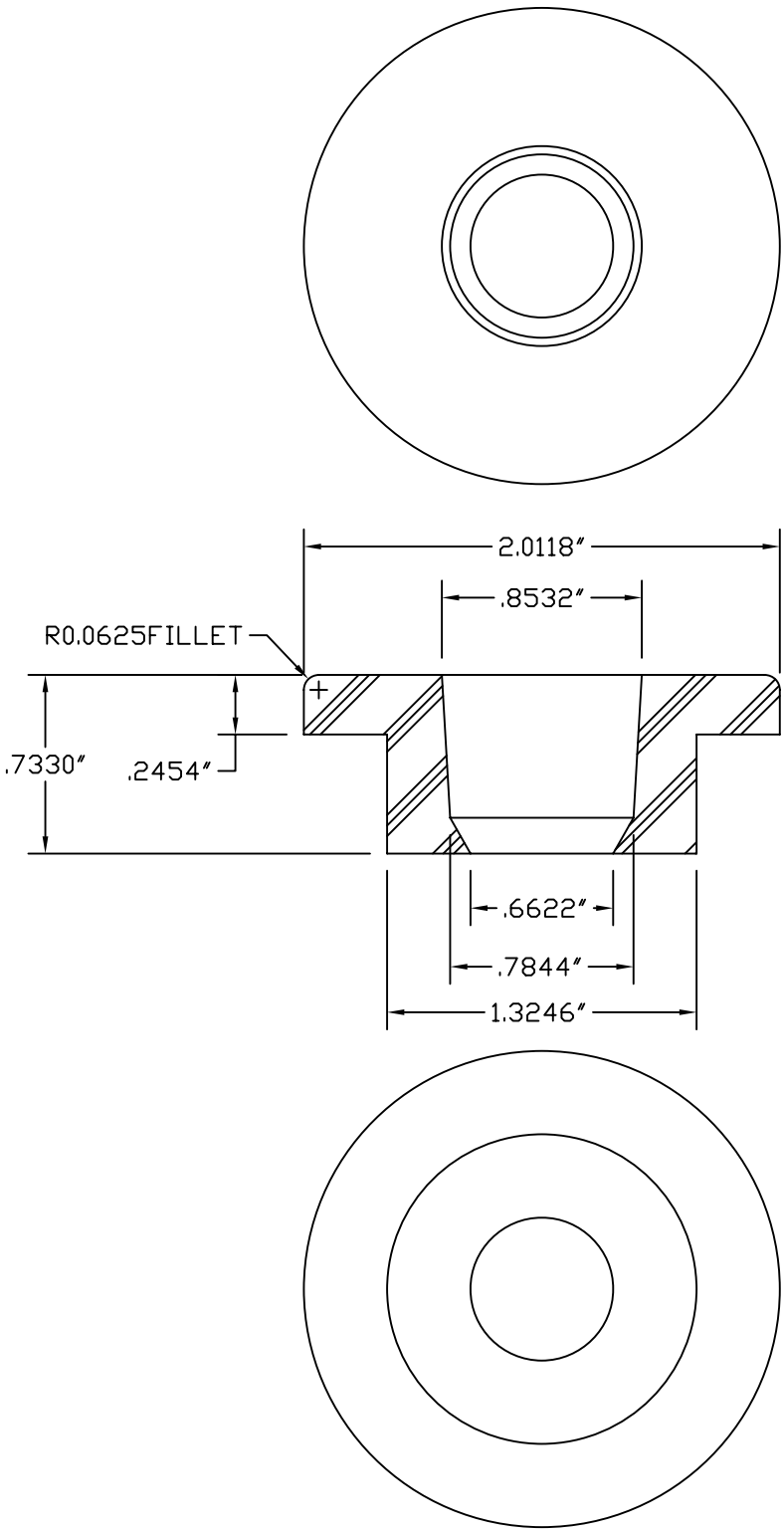

B.O.M
AKR50030 AAF 1/2" ADAPTAFLEX

THIS DRAWING IS THE SOLE PROPERTY OF AK INDUSTRIES INC.

AK INDUSTRIES INC.
2055 PIDCO DR.
PLYMOUTH, IN. 46563
PHONE:(574) 936-6022

DRAWN BY:	TOLERANCE:	SIGNATURE:
M.OLIVAREZ	± 0.025 UNLESS SPECIFIED OTHERWISE	